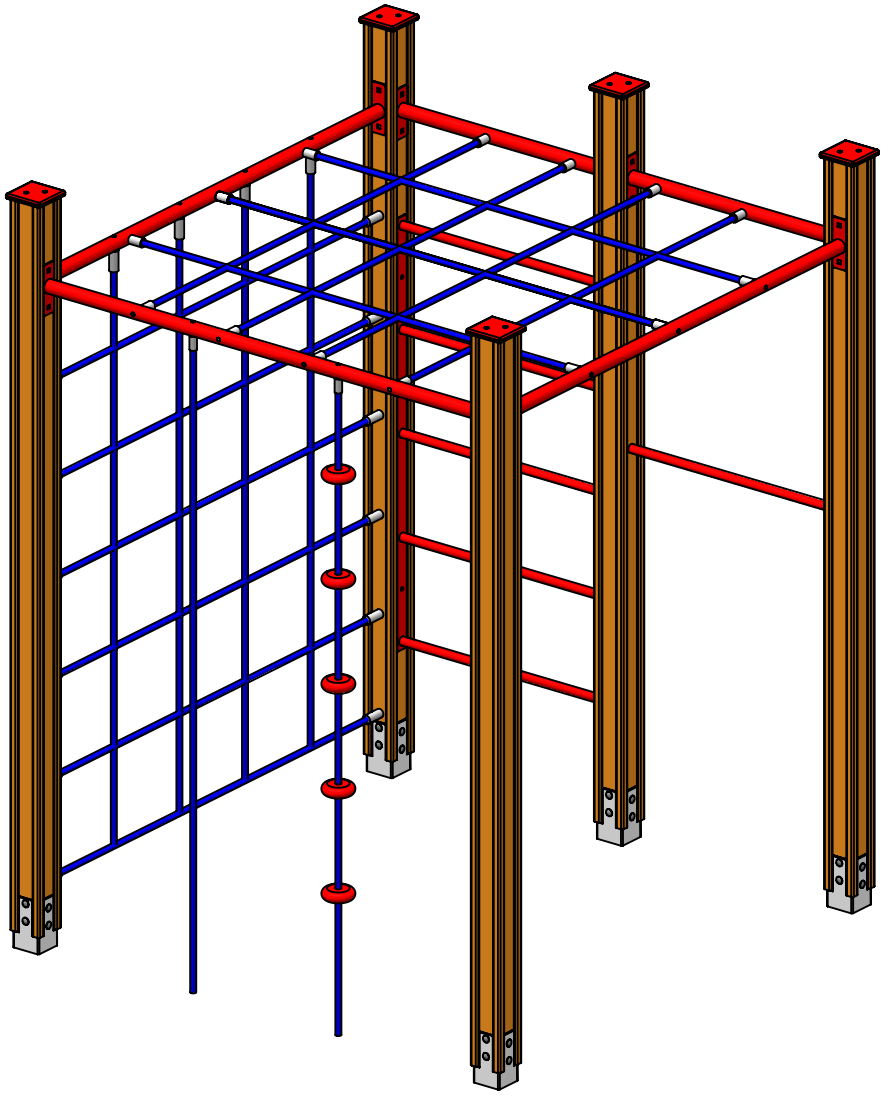

UNLESS OTHERWISE SPECIFIED:
DIMENSIONS ARE IN MILLIMETERS
WEIGHT ARE IN KILOGRAMM

| | NAME | SIGNATURE | DATE | REVISION |
|---|---|---|---|---|
| DRAWN | M.Rebase | | 19.03.2018 | |
| APPV'D | | | | |

Tiptiptap OÜ

Tiptiptap OÜ
Veetorni 9,
Jüri alevik, Rae vald,
75301 Harjumaa

PART NUMBER / DWG NO.:
RS116

DESCRIPTION:
Climbing frame MONKEY

MATERIAL:
wood, metal, plastic

A4

WEIGHT:

SCALE: 1:20

SHEET 1 OF 8

# safety area

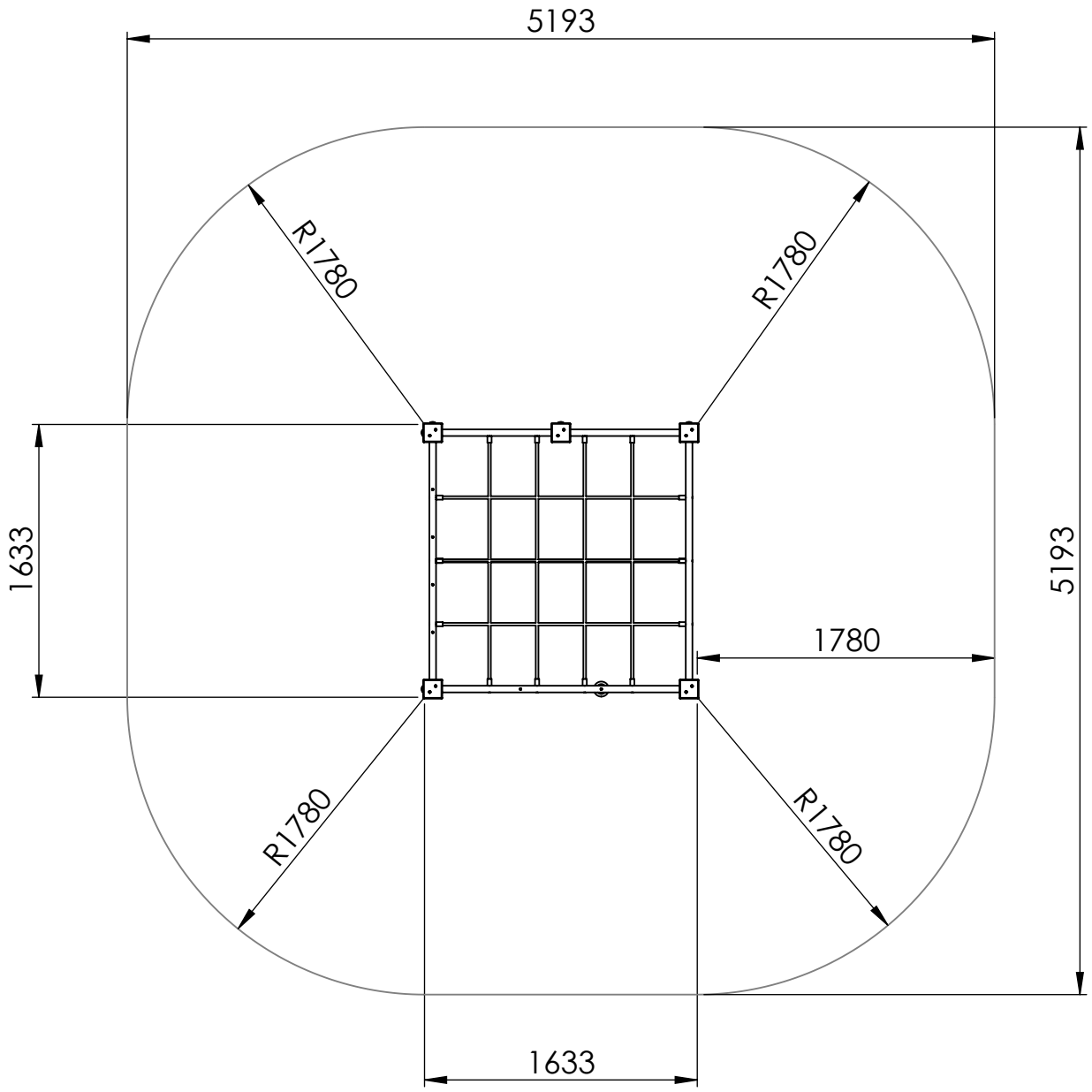


| UNLESS OTHERWISE SPECIFIED:<br>DIMENSIONS ARE IN MILLIMETERS<br>WEIGHT ARE IN KILOGRAMM | | | | | PART NUMBER / DWG NO.: RS116 |
|---|---|---|---|---|---|
| | NAME | SIGNATURE | DATE | REVISION | |
| DRAWN | M.Rebase | | 19.03.2018 | | DESCRIPTION: Climbing frame MONKEY |
| APPV'D | | | | | |

Tiptiptap OÜ
Tiptiptap OÜ
Veetorni 9,
Jüri alevik, Rae vald,
75301 Harjumaa

| MATERIAL: wood, metal, plastic | | A4 |
|---|---|---|
| WEIGHT: | SCALE: 1:40 | SHEET 2 OF 8 |

# foundation

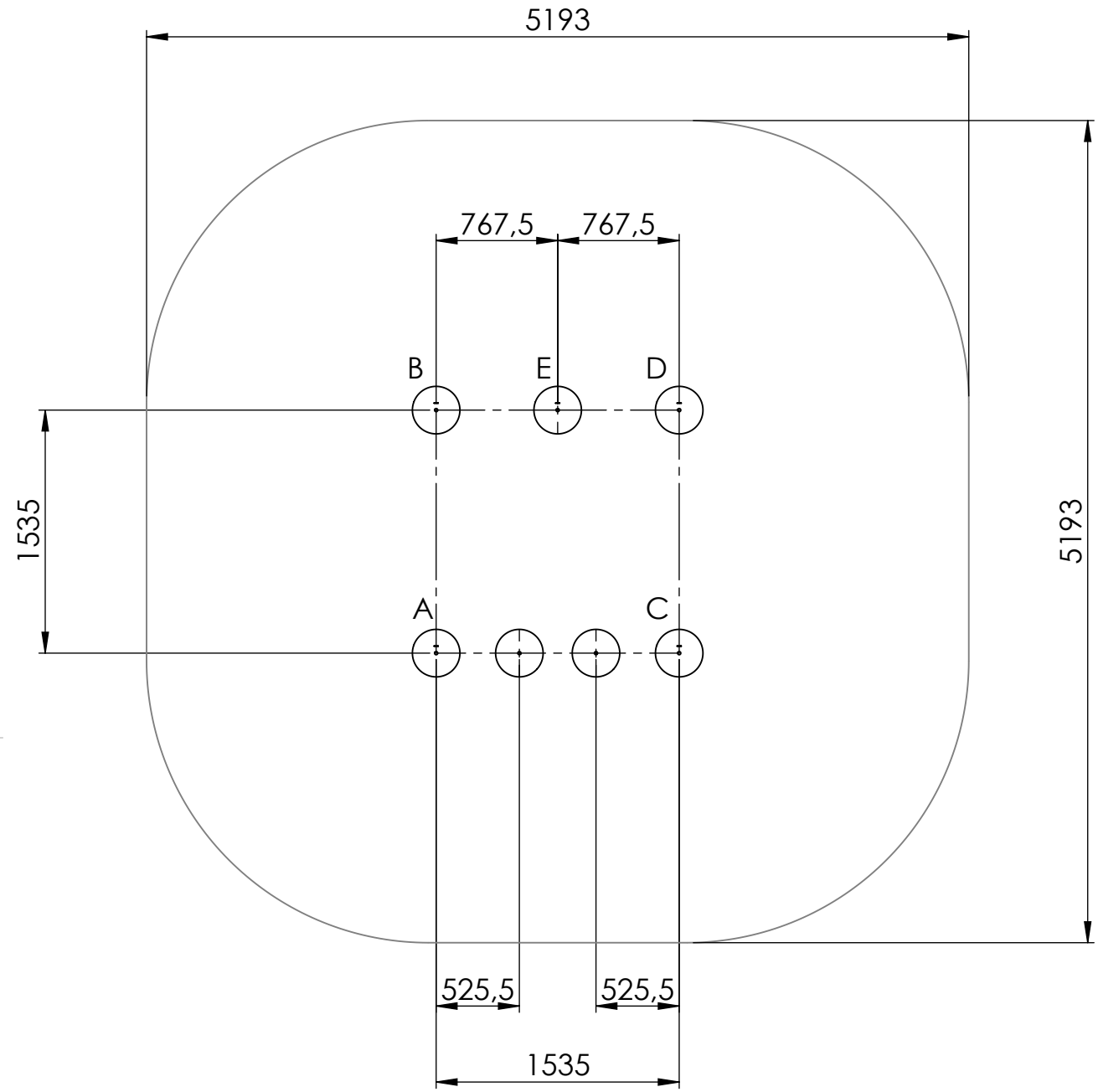


depth of foundation 600mm

UNLESS OTHERWISE SPECIFIED:
DIMENSIONS ARE IN MILLIMETERS
WEIGHT ARE IN KILOGRAMM

| | NAME | SIGNATURE | DATE | REVISION |
|---|---|---|---|---|
| DRAWN | M.Rebase | | 19.03.2018 | |
| APPV'D | | | | |

PART NUMBER / DWG NO.: RS116

DESCRIPTION: Climbing frame MONKEY

MATERIAL: wood, metal, plastic

A4

WEIGHT:

SCALE: 1:40

SHEET 3 OF 8

Tiptiptap OÜ
Tiptiptap OÜ
Veetorni 9,
Jüri alevik, Rae vald,
75301 Harjumaa

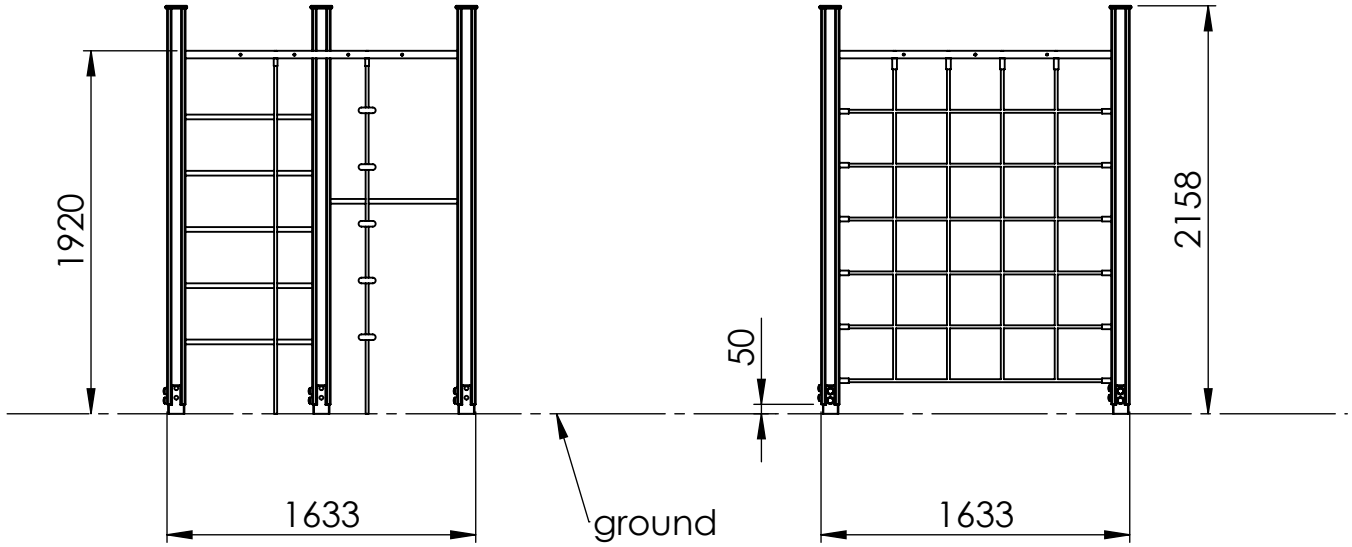


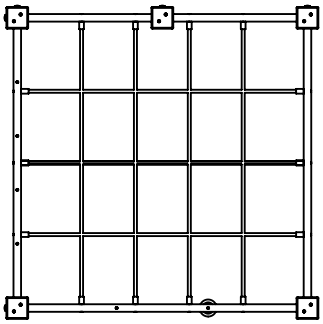

| UNLESS OTHERWISE SPECIFIED:<br>DIMENSIONS ARE IN MILLIMETERS<br>WEIGHT ARE IN KILOGRAMM | | | | |
|---|---|---|---|---|
| | NAME | SIGNATURE | DATE | REVISION |
| DRAWN | M.Rebase | | 19.03.2018 | |
| APPV'D | | | | |

Tiptiptap OÜ
Tiptiptap OÜ
Veetorni 9,
Jüri alevik, Rae vald,
75301 Harjumaa

PART NUMBER / DWG NO.: RS116

DESCRIPTION: Climbing frame MONKEY

MATERIAL: wood, metal, plastic

A4

WEIGHT:

SCALE: 1:40

SHEET 4 OF 8

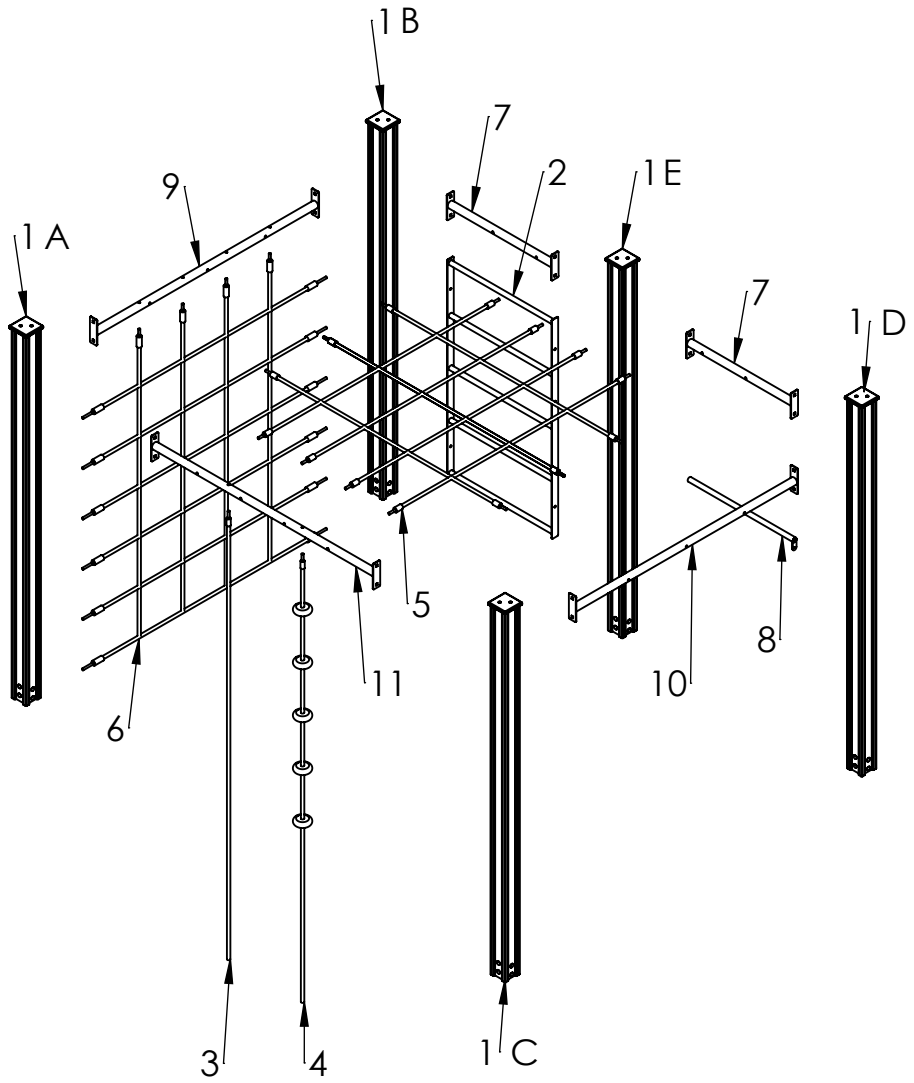


| ITEM NO. | PART NUMBER | DESCRIPTION | QTY. |
|---|---|---|---|
| 1 | post 98x98x2100 | laminated wood, PE plastic | 5 |
| 2 | ladder_vertical 687x1240 | painted steel | 1 |
| 3 | climbing rope | PP covered steel wire | 1 |
| 4 | climbing rope | PP covered steel wire, plastic | 1 |
| 5 | climbing net 1495x1495 | PP covered steel wire | 1 |
| 6 | climbing net 1455x1715 | PP covered steel wire | 1 |
| 7 | beam 40x687 | painted steel | 2 |
| 8 | beam 25x687 | painted steel | 1 |
| 9 | beam 40x1455 A-B | painted steel | 1 |
| 10 | beam 40x1455 C-D | painted steel | 1 |
| 11 | beam 40x1455 A-C | painted steel | 1 |

UNLESS OTHERWISE SPECIFIED:
DIMENSIONS ARE IN MILLIMETERS
WEIGHT ARE IN KILOGRAMM

| | NAME | SIGNATURE | DATE | REVISION |
|---|---|---|---|---|
| DRAWN | M.Rebase | | 19.03.2018 | |
| APPV'D | | | | |

PART NUMBER / DWG NO.: RS116

DESCRIPTION: Climbing frame MONKEY

MATERIAL: wood, metal, plastic

A4

WEIGHT:

SCALE: 1:35

SHEET 5 OF 8

Tiptiptap OÜ
Tiptiptap OÜ
Veetorni 9,
Jüri alevik, Rae vald,
75301 Harjumaa

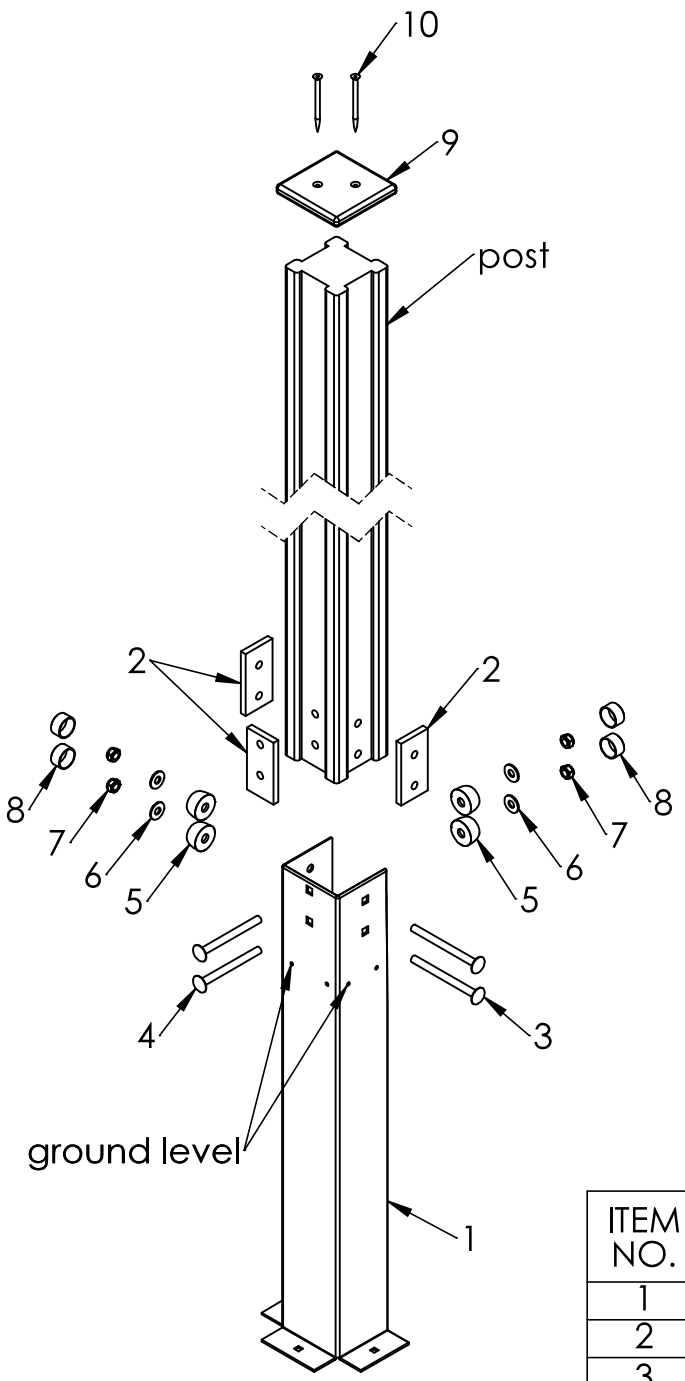


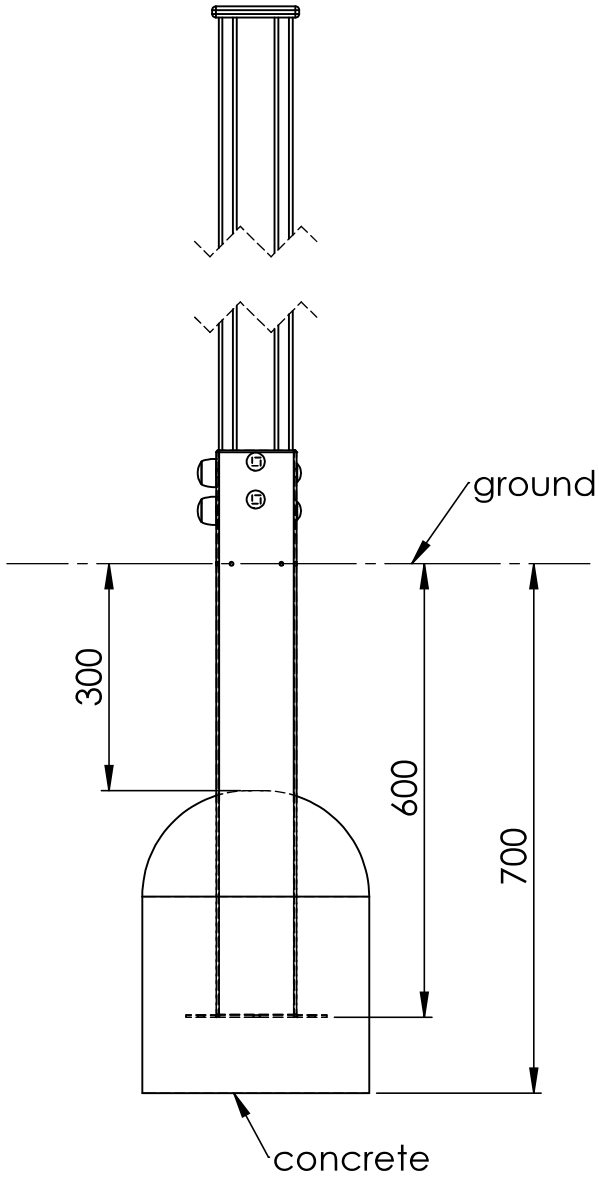


| ITEM NO. | PART NUMBER |
|---|---|
| 1 | ground fixture |
| 2 | plastic detail for ground fixture |
| 3 | bolt M10x120 DIN603 |
| 4 | bolt M10x110 DIN603 |
| 5 | nut cover M12 |
| 6 | washer M10 DIN9054 |
| 7 | nut M10 DIN985 |
| 8 | nut cover cap M12 |
| 9 | plastic cap 115x115 |
| 10 | wood screw 6 x 90 |

UNLESS OTHERWISE SPECIFIED:
DIMENSIONS ARE IN MILLIMETERS
WEIGHT ARE IN KILOGRAMM

| | NAME | SIGNATURE | DATE | REVISION |
|---|---|---|---|---|
| DRAWN | M.Rebase | | 17.08.2020 | |
| APPV'D | | | | |

PART NUMBER / DWG NO.:

DESCRIPTION:

RS116

MATERIAL: wood, metal, plastic

A4

WEIGHT:

SCALE: 1:10

SHEET 8 OF 23

Tiptiptap OÜ
Tiptiptap OÜ
Veetorni 9,
Jüri alevik, Rae vald,
75301 Harjumaa

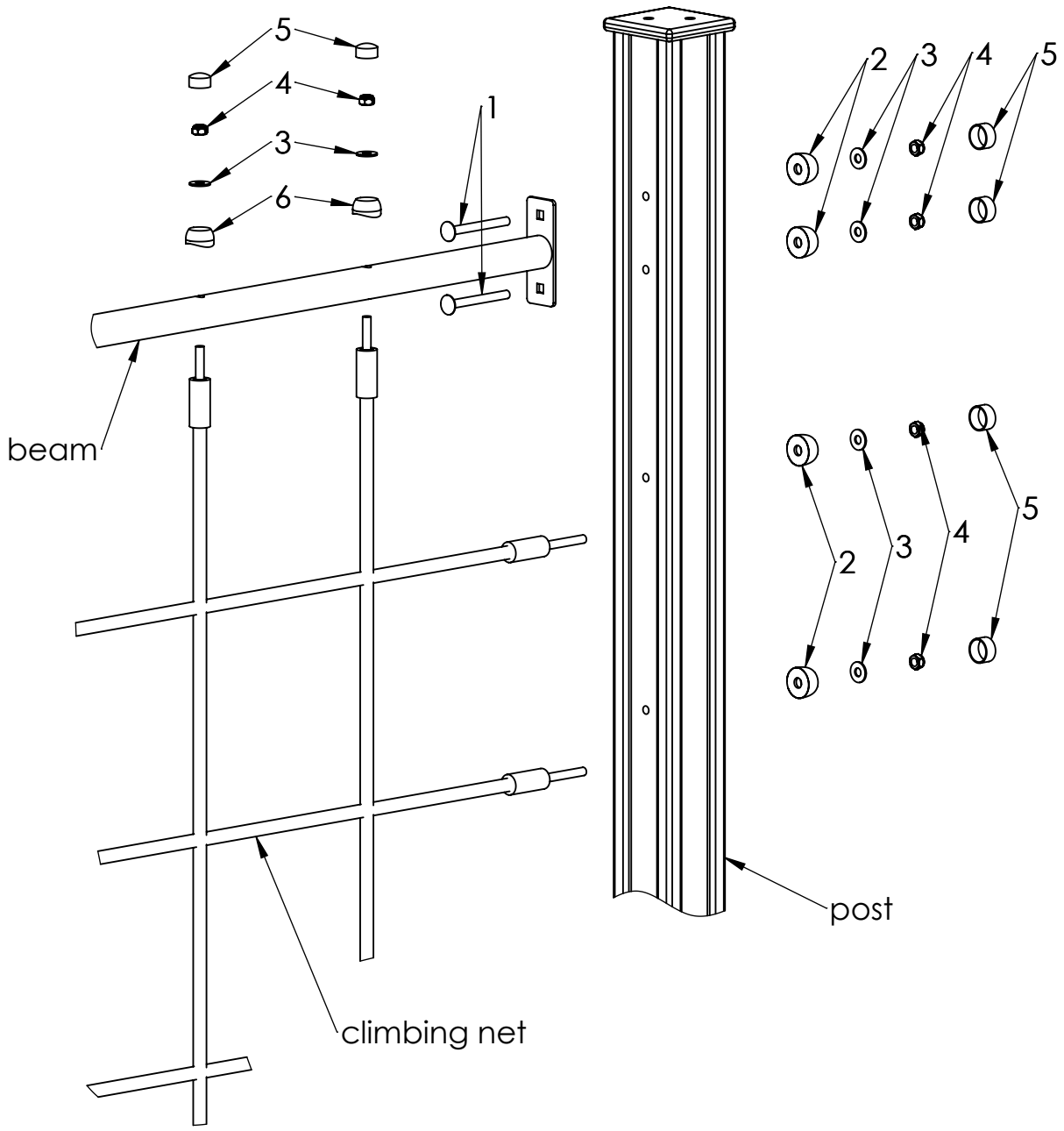


| ITEM NO. | PART NUMBER |
|---|---|
| 1 | bolt M10x100 DIN603 |
| 2 | nut cover M12 |
| 3 | washer M10 DIN9054 |
| 4 | nut M10 DIN985 |
| 5 | nut cover cap M12 |
| 6 | nut cover M12 for beam |

UNLESS OTHERWISE SPECIFIED:
DIMENSIONS ARE IN MILLIMETERS
WEIGHT ARE IN KILOGRAMM

| | NAME | SIGNATURE | DATE | REVISION |
|---|---|---|---|---|
| DRAWN | M.Rebase | | 19.03.2018 | |
| APPV'D | | | | |

PART NUMBER / DWG NO.: RS116

DESCRIPTION: Climbing frame MONKEY connecting beam and climbing net to post

MATERIAL: wood, metal, plastic

A4

WEIGHT:

SCALE: 1:8

SHEET 7 OF 8

Tiptiptap OÜ
Tiptiptap OÜ
Veetorni 9,
Jüri alevik, Rae vald,
75301 Harjumaa

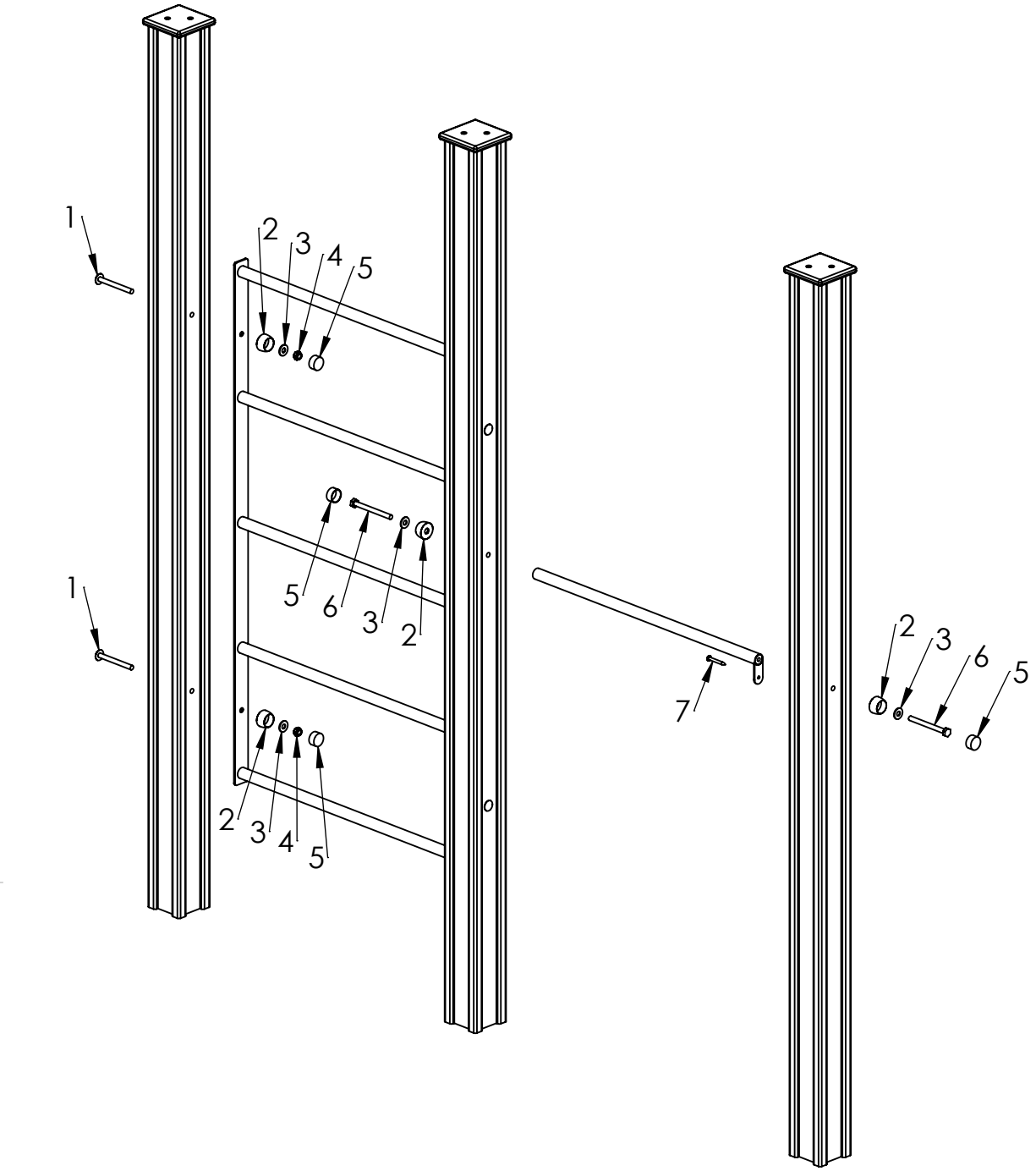


| ITEM NO. | PART NUMBER |
|---|---|
| 1 | bolt M10x100 DIN603 |
| 2 | nut cover M12 |
| 3 | washer M10 DIN9054 |
| 4 | nut M10 DIN985 |
| 5 | nut cover cap M12 |
| 6 | bolt M10x110 DIN931 |
| 7 | screw 4,8x40 |

UNLESS OTHERWISE SPECIFIED:
DIMENSIONS ARE IN MILLIMETERS
WEIGHT ARE IN KILOGRAMM

| | NAME | SIGNATURE | DATE | REVISION |
|---|---|---|---|---|
| DRAWN | M.Rebase | | 19.03.2018 | |
| APPV'D | | | | |

PART NUMBER / DWG NO.: RS116

DESCRIPTION: Climbing frame MONKEY

MATERIAL: wood, metal, plastic

A4

WEIGHT:

SCALE: 1:14

SHEET 8 OF 8

Tiptiptap OÜ
Tiptiptap OÜ
Veetorni 9,
Jüri alevik, Rae vald,
75301 Harjumaa