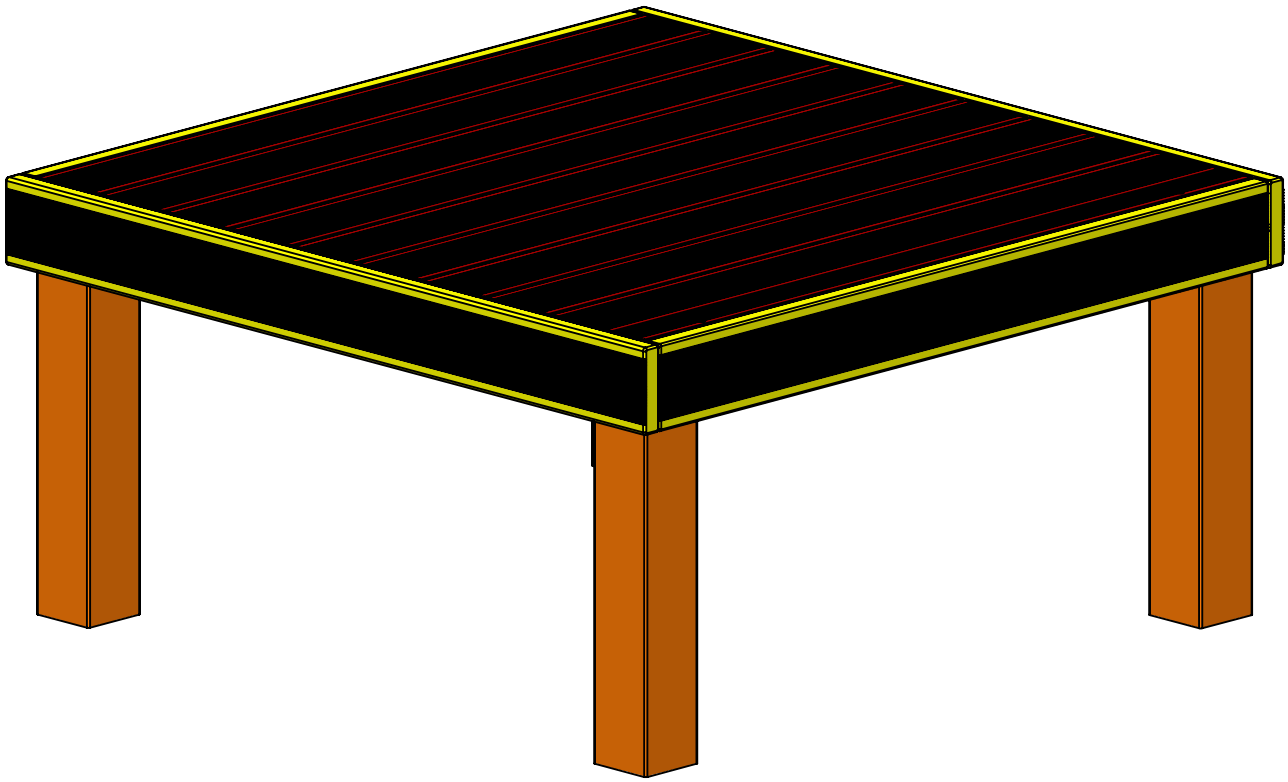

UNLESS OTHERWISE SPECIFIED:
DIMENSIONS ARE IN MILLIMETERS
WEIGHT ARE IN KILOGRAMM

	NAME	SIGNATURE	DATE	REVISION
DRAWN	I.Agar		24.05.2022	
APPV'D				

Tiptiptap OÜ

PART NUMBER / DWG NO.: AT005

DESCRIPTION: Agility platform

MATERIAL: wood, metal, plastic

A4

WEIGHT:

SCALE: 1:10

SHEET 1 OF 3

Foundation

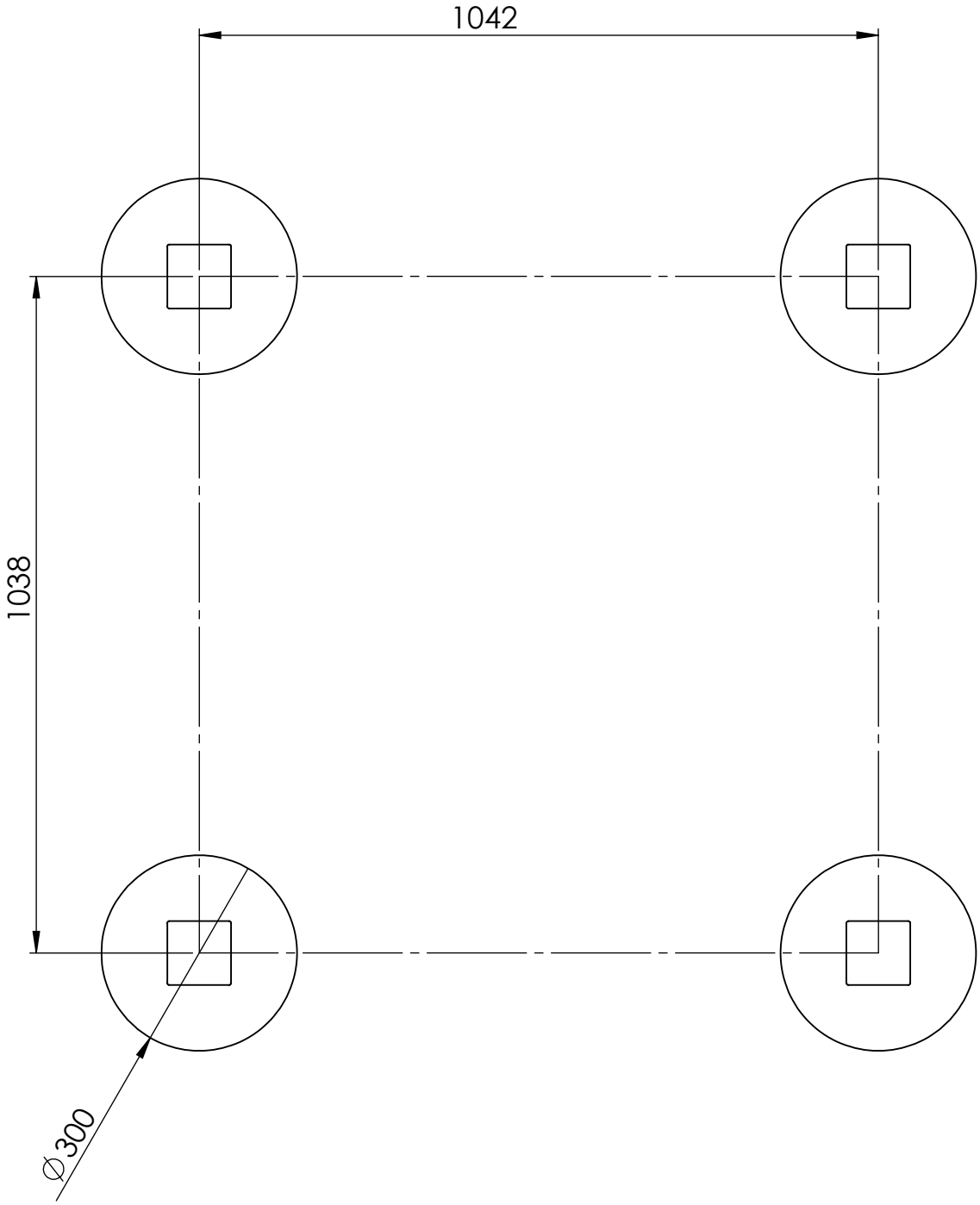

UNLESS OTHERWISE SPECIFIED:
DIMENSIONS ARE IN MILLIMETERS
WEIGHT ARE IN KILOGRAMM

	NAME	SIGNATURE	DATE	REVISION
DRAWN	I.Agar		24.05.2022	
APPV'D				

Tiptiptap OÜ

PART NUMBER / DWG NO.: AT005

DESCRIPTION: Agility platform

MATERIAL: wood, metal, plastic

A4

WEIGHT:

SCALE: 1:10

SHEET 2 OF 3

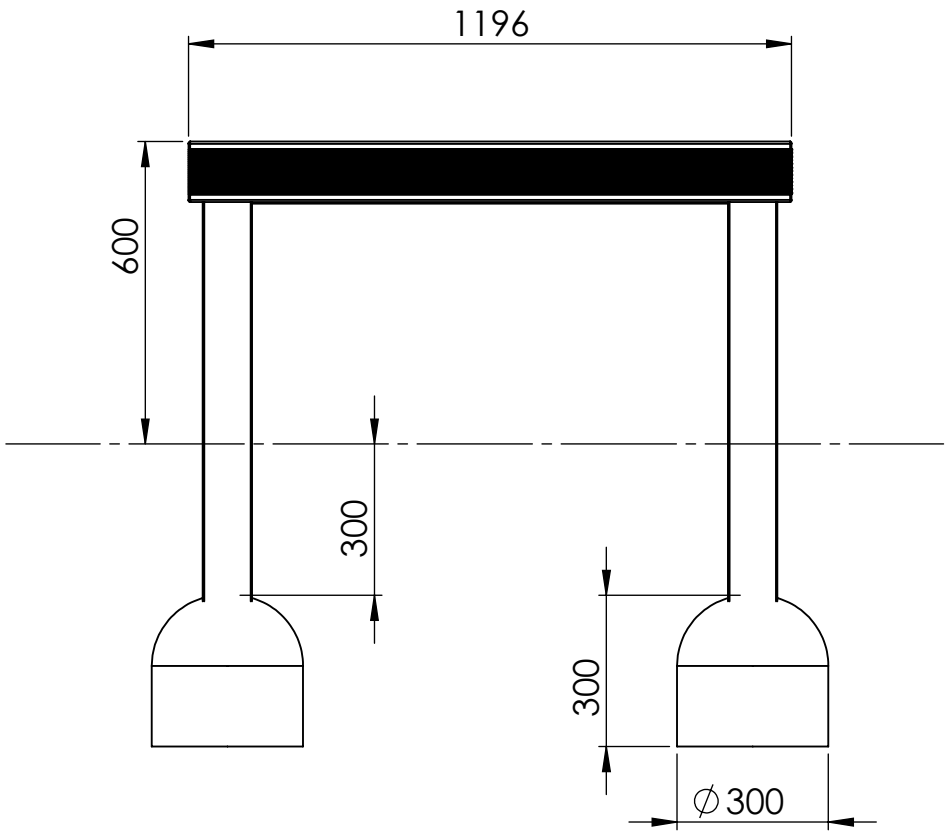

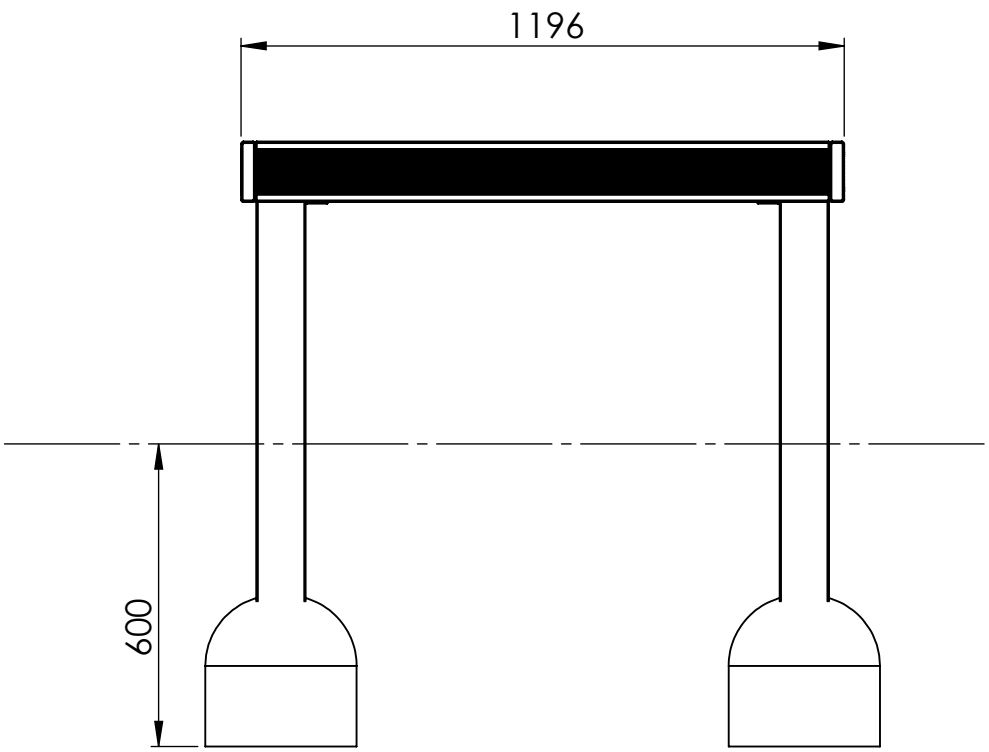

UNLESS OTHERWISE SPECIFIED:
DIMENSIONS ARE IN MILLIMETERS
WEIGHT ARE IN KILOGRAMM

	NAME	SIGNATURE	DATE	REVISION
DRAWN	I.Agar		24.05.2022	
APPV'D				

Tiptiptap OÜ

PART NUMBER / DWG NO.: AT005

DESCRIPTION: Agility platform

MATERIAL: wood, metal, plastic

A4

WEIGHT:

SCALE: 1:15

SHEET 3 OF 3