UNLESS OTHERWISE SPECIFIED:
DIMENSIONS ARE IN MILLIMETERS
WEIGHT ARE IN KILOGRAMM

	NAME	SIGNATURE	DATE
DRAWN	I.Agar		08.12.2023

Tiptiptap OÜ

Product code:

PP005-1

DESCRIPTION:

Picnic table with backrest large

A4

WEIGHT:

SCALE: 1:15

SHEET 1 OF 5

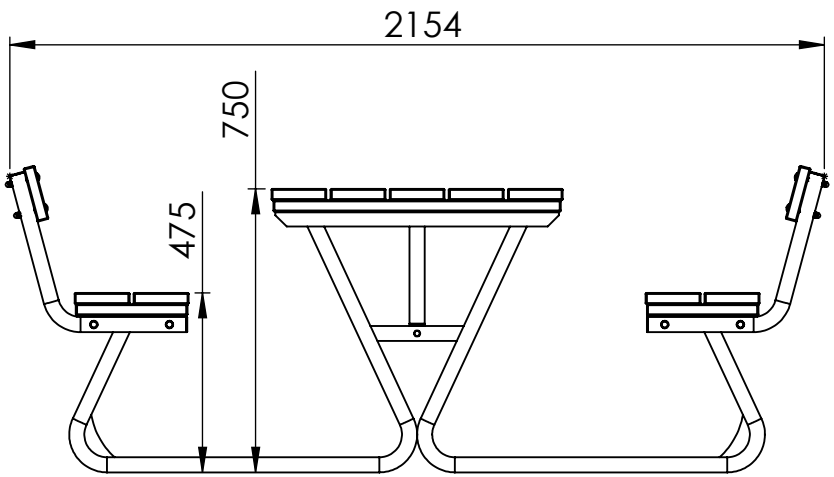

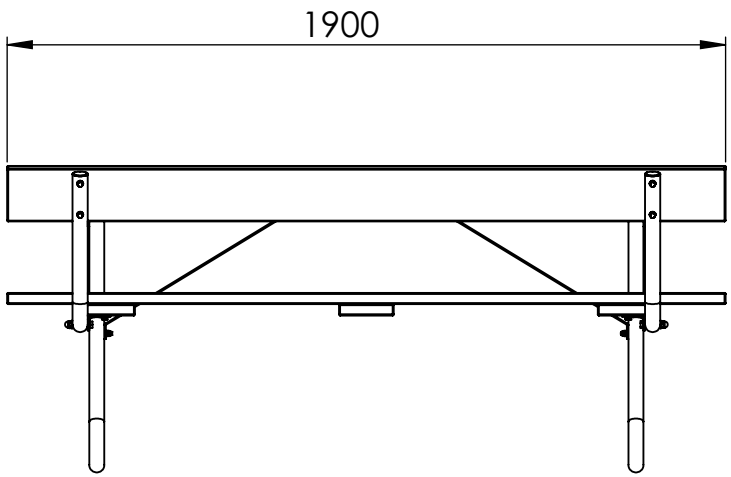

UNLESS OTHERWISE SPECIFIED:
DIMENSIONS ARE IN MILLIMETERS
WEIGHT ARE IN KILOGRAMM

	NAME	SIGNATURE	DATE
DRAWN	I.Agar		08.12.2023

Tiptiptap OÜ

Product code:
PP005-1

DESCRIPTION:
Picnic table with backrest large

A4

WEIGHT:

SCALE: 1:20

SHEET 2 OF 5

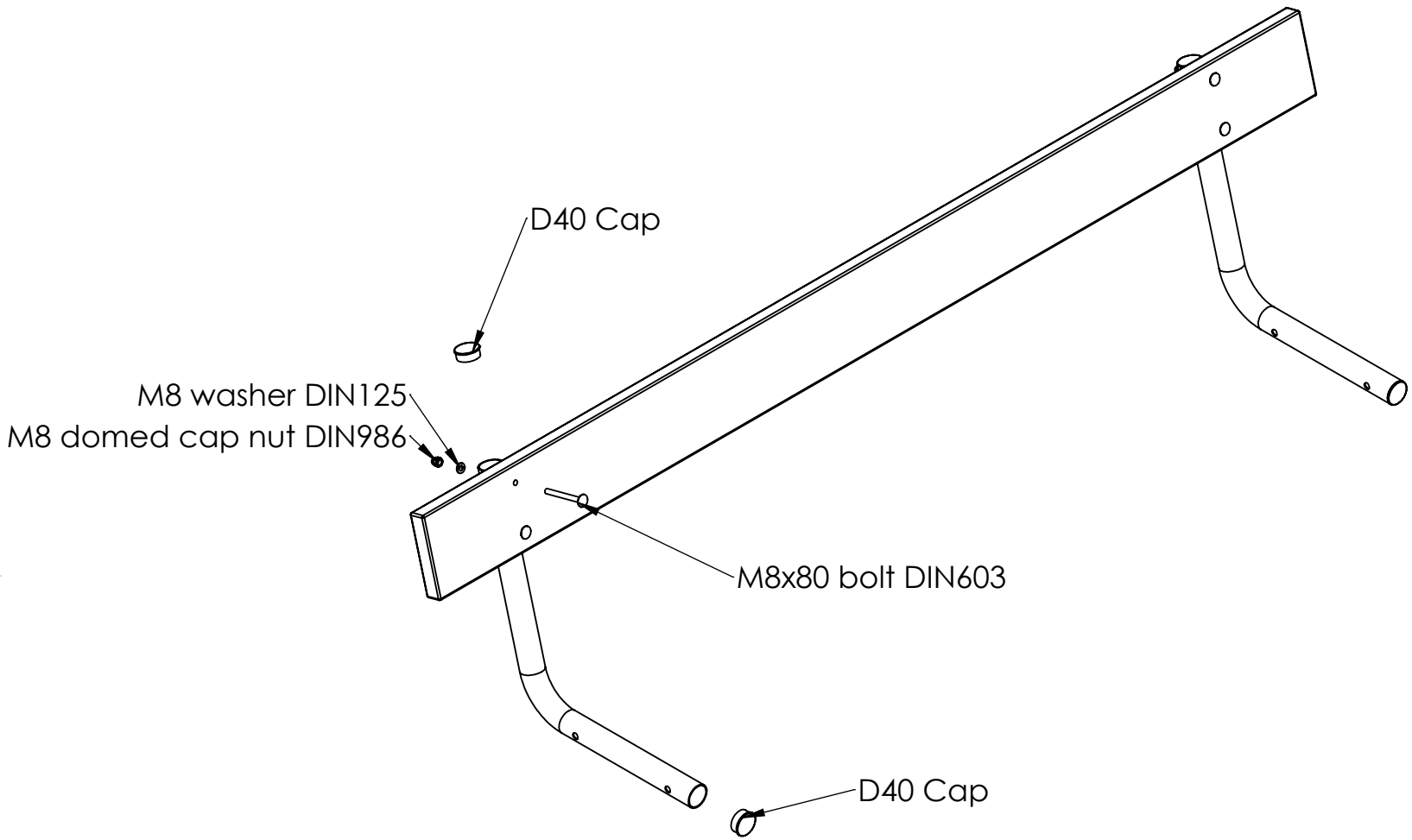

UNLESS OTHERWISE SPECIFIED:
DIMENSIONS ARE IN MILLIMETERS
WEIGHT ARE IN KILOGRAMM

	NAME	SIGNATURE	DATE
DRAWN	I.Agar		08.12.2023

Tiptiptap OÜ

Product code:
PP005-1

DESCRIPTION:
Picnic table with backrest large

A4

WEIGHT:

SCALE: 1:10

SHEET 3 OF 5

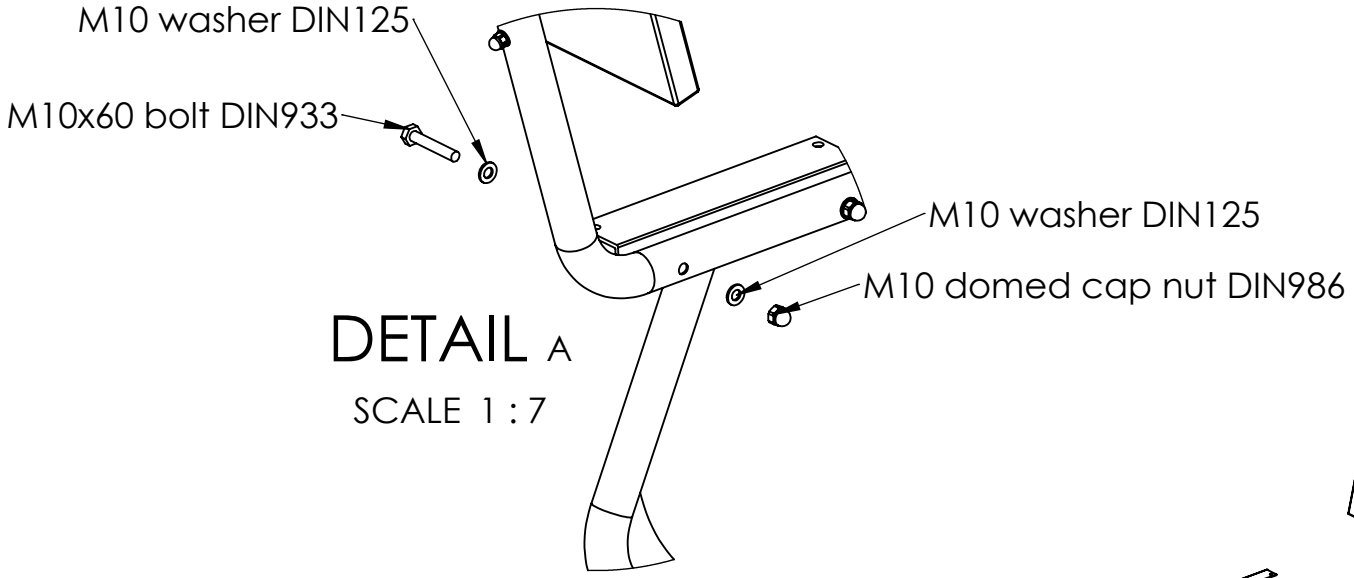

DETAIL A

SCALE 1 : 7

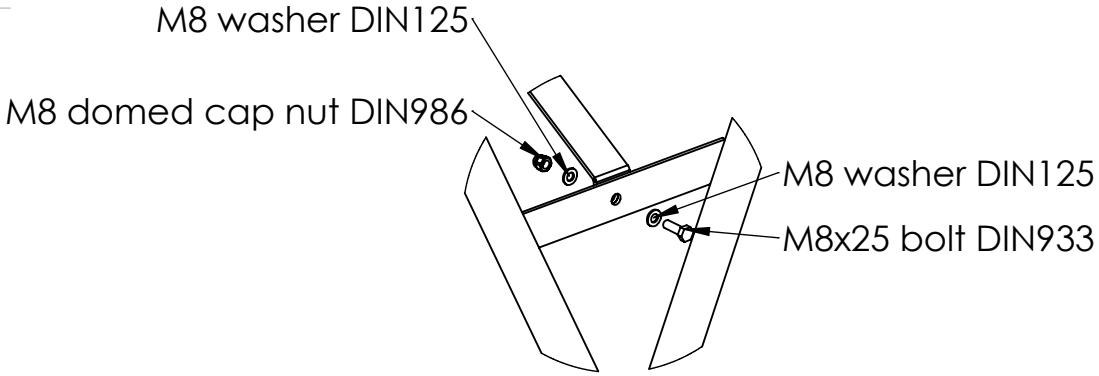

DETAIL B

SCALE 1 : 7

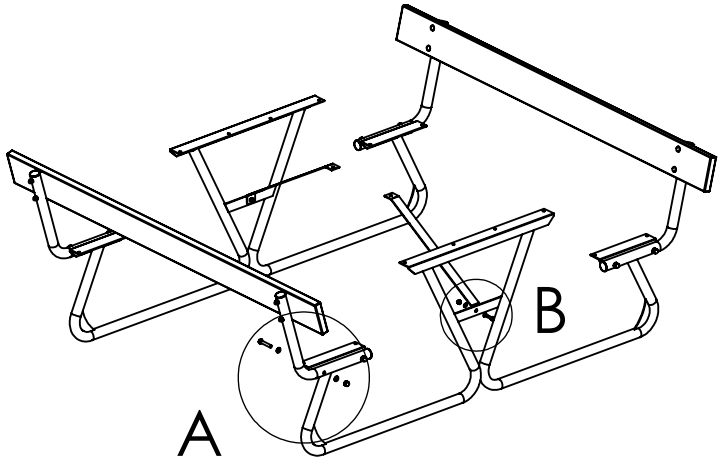

UNLESS OTHERWISE SPECIFIED:
DIMENSIONS ARE IN MILLIMETERS
WEIGHT ARE IN KILOGRAMM

	NAME	SIGNATURE	DATE
DRAWN	I.Agar		08.12.2023

Tiptiptap OÜ

Product code: PP005-1

DESCRIPTION: Picnic table with backrest large

A4

WEIGHT: | SCALE: 1:30 | SHEET 4 OF 5

The tabletop and the seat are all attached with the same fastening accessories. Be sure to drill holes for the screws with a 6mm drill before screwing them in!!!

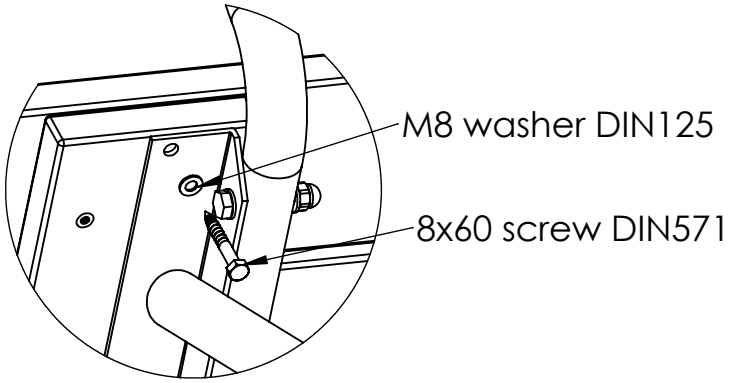

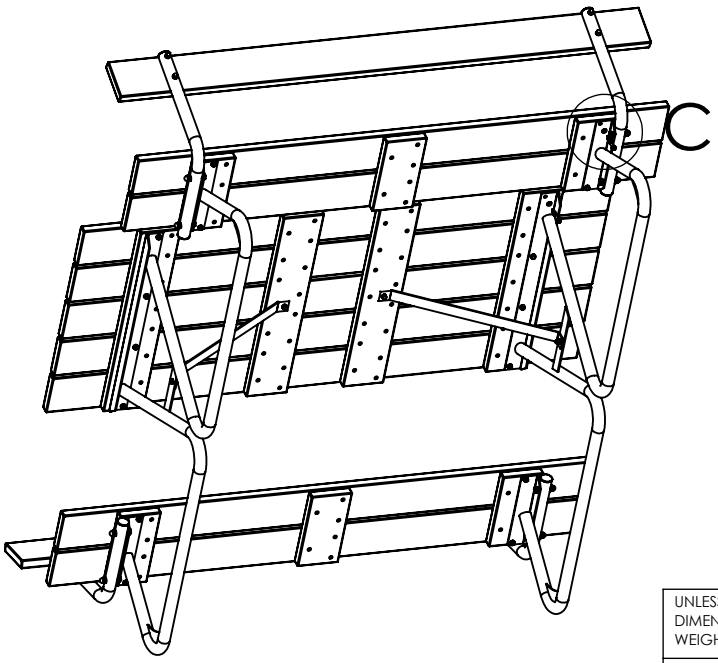

DETAIL C

SCALE 1 : 5

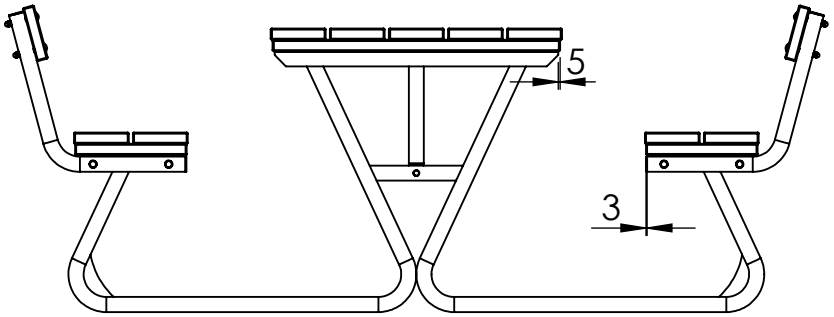

UNLESS OTHERWISE SPECIFIED: DIMENSIONS ARE IN MILLIMETERS WEIGHT ARE IN KILOGRAMM			
	NAME	SIGNATURE	DATE
DRAWN	I.Agar		08.12.2023

Tiptiptap OÜ

Product code: PP005-1

DESCRIPTION: Picnic table with backrest large

A4

WEIGHT: | SCALE: 1:25 | SHEET 5 OF 5